Saturn_S

Deckenleuchten | 220-240 V
84 topLED 29 W DC - 36 W AC | CRI 90
7653

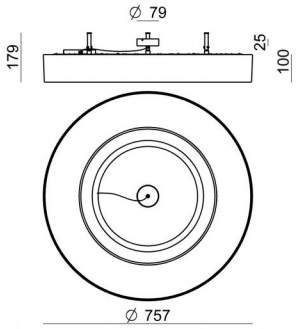

Technische Daten	
Jahr der Verwirklichung	2016
Typ	Oberfläche
Installationsposition	Decke
Installationsumgebung	Indoor
Lichtquelle	LED
Gesamtleistung	36 W
Lichtstrom (Lichtquelle)	3686 lm
Voltage	220 - 240 V AC
Frequency	50 - 60 Hz
Ähnlichste Farbtemperatur / Tone	3000 K
Farbwiedergabeindex	90 Ra
Gleichstrom/Gleichspannung	AC
Isolierklasse	1
IP	IP40
Glühdrahtprüfung	650°
Direkte Montage auf normal entflammbaren Oberflächen	Ja
CE	Ja
Einschließlich Driver	Driver
Leuchte dimmbar	DALI - PUSH DIM
Schwenkbarkeit	Nein
Drehbarkeit	Nein
Begehbarkeit	Nein
Überrollbarkeit	Nein
Einschließlich Kabel	Nein
Harzbeschichtung	Nein
Typ Lichtabstrahlung	Zweiflammig
Nettogewicht	8 Kg
Schutz vor elektrostatischen Entladungen	Nein
Schutz vor Stoßspannungen	Nein

Oberfläche Gehäuse	
Material	Metall
Farbe	Weiß geprägtem RAL 9003
Bearbeitungstyp	Lackierung

Oberfläche Diffusor	
Material	PE
Farbe	neutral

Oberfläche Fassung	
Material	Metall
Farbe	Weiß geprägtem RAL 9003
Bearbeitungstyp	Lackierung

Linea Light Group reserves the right, without any advance notice, to change the characteristics of their products, as well as the availability of the same at any time. No product, relative technical data, illustrations and information are binding for Linea Light Group. Linea Light Group will not be held liable for any illustration, text and/or translation\ errors. All values indicated are measured values. There is a +/- 10% tolerance for the flow, CCT and power data.

Saturn_S

Deckenleuchten | 220-240 V | 84 topLED 29 W DC - 36 W AC | CRI 90
7653

Double emission ceiling lights for indoor application. The warm white LED light source with a diffused light distribution is composed of 84 topled LEDs with CCT of 3000 K and a CRI 90; the source luminous flux is 3686 lm, with a 127.1 lm/W nominal luminous efficacy.

The device body is made of metal and features a embossed white ral 9003 finish, processed by means of coating; the diffuser is made of pe; the mounting frame is made of metal, with a embossed white ral 9003 finish, processed by means of coating. The ingress protection degree is IP40; the total weight is of 8 kg.

The total absorbed power is 36 W.

The device features protection class I and can be ceiling-mounted.

Compliant with the EN 60598-1 standard and its specific provisions.

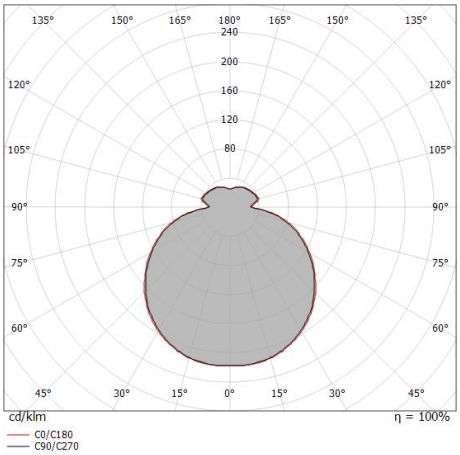

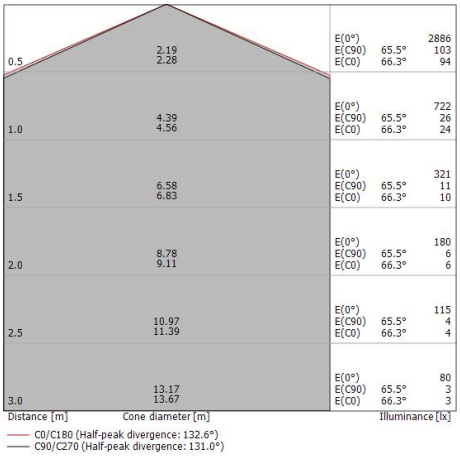

Energieeffizienzklasse
Dieses Produkt enthält 14 Lichtquellen der Energieeffizienzklasse E.

Illuminotechnical Eigenschaften	
Light Output Ratio (LOR)	89 %
Lichtstrom (Lichtquelle)	3686 lm
Leuchten Lichtstrom	3315 lm
Consumption	36 W
Leuchten Lichtausbeute	92 lm/W
Farbtemperatur	3000 K
Standard Deviation of Colour Matching	3 Step MacAdam
Farbwiedergabeindex	90 Ra
Verbindungstemperatur (Leuchte)	80
Standardumgebungstemperatur	25°C

LED Life / Failure Ratio
L80 B20 C0 80000h

UGR	
UGR axial	19.5
UGR transversal	19.7
X=4H | Y=8H	S=0.25H
Reflection factor	70/50/20

OPTICAL	
Optik C0/C180	131°
Light distribution simmetry	Symmetrical

Linea Light Group reserves the right, without any advance notice, to change the characteristics of their products, as well as the availability of the same at any time. No product, relative technical data, illustrations and information are binding for Linea Light Group. Linea Light Group will not be held liable for any illustration, text and/or translation\ errors. All values indicated are measured values. There is a +/- 10% tolerance for the flow, CCT and power data.

Saturn_S

Saturn_S | Ceiling Lights | Accessories
7653

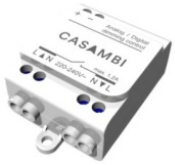

Dimmer
Bluetooth, 220-240V

Code
KIT0079

Linea Light Group reserves the right, without any advance notice, to change the characteristics of their products, as well as the availability of the same at any time. No product, relative technical data, illustrations and information are binding for Linea Light Group. Linea Light Group will not be held liable for any illustration, text and/or translation\ errors. All values indicated are measured values. There is a +/- 10% tolerance for the flow, CCT and power data.